Part number:

HYDROMA HYDRAULICKÉ SYSTÉMY | HIDROMA SISTEMS UKŁADY HYDRAULICZNE | HYDROMA ГИДРАВЛИЧЕСКИЕ СИСТЕМЫ

Relief, direct acting guided poppet type

Common cavity

Cartridge style in manifold

VSBN-10A-C **OR.02 - K - X - Y - Z - W**

Dimensions

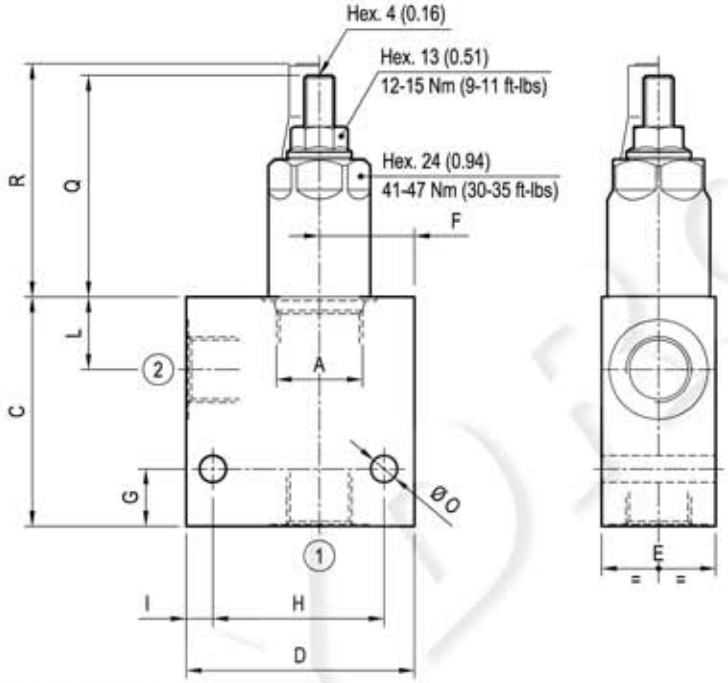

Technical data

Max flow:	up to 50 l/min	(13 gpm)
Max operating pressure for **steel** body:	350 bar	(5000 psi)
Max operating pressure for **aluminium** body:	210 bar	(3000 psi)

To order only manifold see data sheet RE 18325-85

Table "Y"

Cavity A	Y	PORT SIZE 1 - 2		Max Flow l/min (gpm)	DIMENSIONS mm (Inches) C	D	E	F	G	H	I	L	M	N	O	Q	R
SIZE 08																	
SIZE 10	03	G 1/2		50 (13)	60 (2.36)	60 (2.36)	35 (1.38)	25 (0.98)	15 (0.59)	45 (1.77)	7.5 (0.3)	19 (0.75)			7.5 (0.30)	58 (2.28)	61 (2.4)
	04	G 3/4			60 (2.36)	70 (2.76)	40 (1.58)	30 (1.18)	15 (0.59)	55 (2.17)	7.5 (0.3)	20 (0.79)			9 (0.35)		
SIZE 12																	
SIZE 16																	
SIZE 20																	

Cartridge style

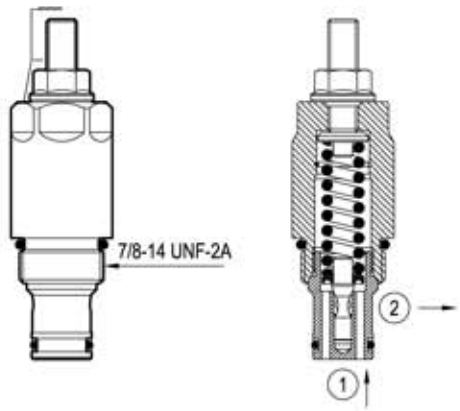

Table "K"

			K				
CARTRIDGE CODE	04	11	55	X	85	Z	VSBN-10A

Table "X"

X	ADJUSTMENTS	
03	Leakproof hex. socket screw	

OPTIONS
Ordering code 11.04.23.002

CARTRIDGE TECHNICAL DATA
Common cavity: **CA-10A-2N** For other details see data sheet RE 18318-05

Table "Z"

Z	SPRINGS														
	SIZE 08			SIZE 10			SIZE 12			SIZE 16			SIZE 20		
	Adj. press. range bar(psi)	Pres. increase bar/turn (psi/turn)	Std. setting 5 l/min bar (psi)	Adj. press. range bar(psi)	Pres. increase bar/turn (psi/turn)	Std. setting 5 l/min bar (psi)	Adj. press. range bar(psi)	Pres. increase bar/turn (psi/turn)	Std. setting 5 l/min bar (psi)	Adj. press. range bar(psi)	Pres. increase bar/turn (psi/turn)	Std. setting 5 l/min bar (psi)	Adj. press. range bar(psi)	Pres. increase bar/turn (psi/turn)	Std. setting 5 l/min bar (psi)
05				5-70 (75-1000)	16 (232)	50 (725)									
10				35-140 (500-2000)	24 (348)	100 (1450)									
20				105-210 (1500-3000)	54 (783)	200 (2900)									
35				175-350 (2500-5000)	84 (1218)	350 (5000)									

Performance graph

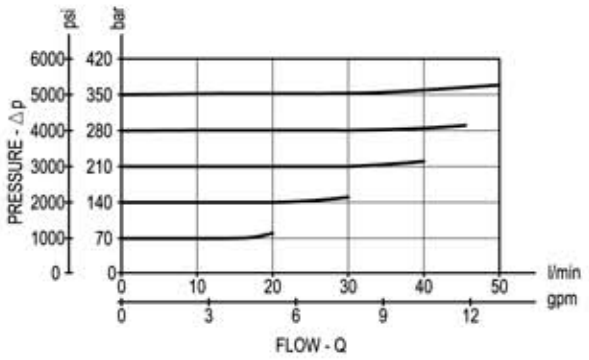

Ordering code

OR.02	K	X	Y	Z	W

Manifold with relief direct acting guided poppet type

Cartridge style - Common cavity
(see table K on page 2)

Cartridge style - Adjustments
(see table X on page 2)

Manifold style - Dimensions and port sizes
(see table Y on page 1)

Settings - Springs
(see table Z on page 2)

Manifold material

= 00	Aluminium manifold
= S0	Steel manifold

Preferred types (readily available)

Type	Material number
OR0255030420S0	R934001548
OR0255030435S0	R934001157
OR025503030500	R934003776
OR025503032000	R934003777

Type	Material number